20.Cylinder Head

A: REMOVAL

NOTE:
Perform the work with the engine installed to body when replacing a single part. Refer to “Valve Clearance” for preparation. <Ref. to ME(H4SO)-29, Valve Clearance.>

1) Remove the V-belts. <Ref. to ME(H4SO)-39, REMOVAL, V-belt.>
2) Remove the crank pulley. <Ref. to ME(H4SO)-41, REMOVAL, Crank Pulley.>
3) Remove the timing belt cover. <Ref. to ME(H4SO)-42, REMOVAL, Timing Belt Cover.>
4) Remove the timing belt. <Ref. to ME(H4SO)-43, REMOVAL, Timing Belt.>
5) Remove the cam sprocket. <Ref. to ME(H4SO)-48, REMOVAL, Cam Sprocket.>
6) Remove the intake manifold. <Ref. to FU(H4SO)-13, REMOVAL, Intake Manifold.>
7) Remove the bolt which installs the A/C compressor bracket on cylinder head.
8) Remove the valve rocker assembly. <Ref. to ME(H4SO)-51, REMOVAL, Valve Rocker Assembly.>
9) Remove the camshaft. <Ref. to ME(H4SO)-54, REMOVAL, Camshaft.>
10) Remove the cylinder head bolts in alphabetical sequence as shown in the figure.

NOTE:
Leave bolts (a) and (c) engaged by three or four threads to prevent the cylinder head from falling.

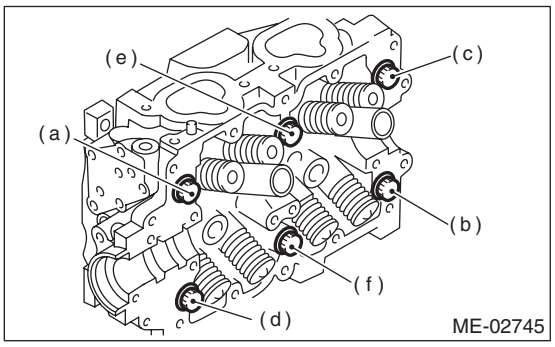

11) While tapping the cylinder head with a plastic hammer, separate it from cylinder block.
12) Remove the bolts (a) and (c) to remove cylinder head.

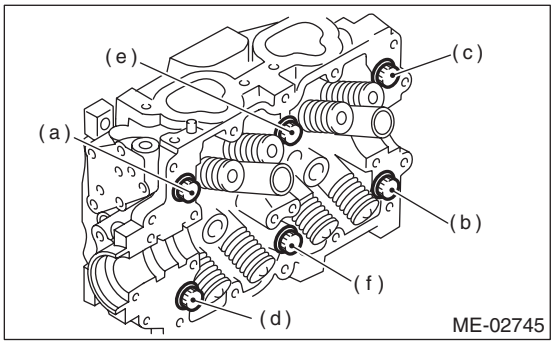

13) Remove the cylinder head gasket.

CAUTION:
Be careful not to scratch the mating surface of cylinder head and cylinder block.

14) Similarly, remove the right side cylinder head.

B: INSTALLATION

1) Install the cylinder head and gaskets on cylinder block.

CAUTION:
Be careful not to scratch the mating surface of cylinder block and cylinder head.

NOTE:
Use a new gasket.

2) Tighten the cylinder head bolts.
   (1) Apply a thin coat of engine oil to washer and bolt thread.
   (2) Tighten all bolts to 29 N·m (3.0 kgf-m, 21.4 ft-lb) in alphabetical order. Then tighten all bolts to 69 N·m (7.0 kgf-m, 50.9 ft-lb) in alphabetical sequence.
   (3) Loosen all the bolts by 180° in reverse order of installation, and loosen again by 180° in the same order.
   (4) Tighten all bolts to 42 N·m (4.3 kgf-m, 31 ft-lb) in alphabetical order.
   (5) Tighten all bolts by 80 to 90° in alphabetical sequence.
   (6) Tighten all bolts by 40 to 45° in alphabetical sequence.

CAUTION:
The tightening angle of the bolt should not exceed 45°.

   (7) Further tighten the bolts (a) and (b) by 40 — 45°.

CAUTION:
Make sure the total “re-tightening angle” of the step (6) and (7) does not exceed 90°.

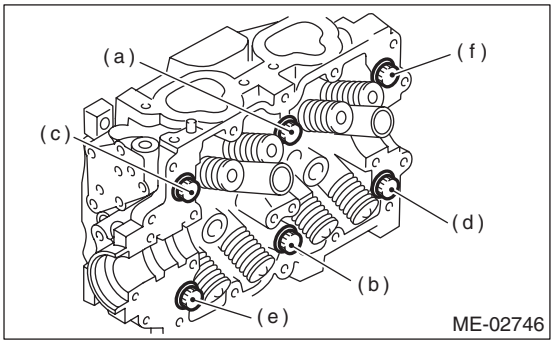

3) Install the camshaft. <Ref. to ME(H4SO)-55, INSTALLATION, Camshaft.>
4) Install the valve rocker assembly. <Ref. to ME(H4SO)-51, INSTALLATION, Valve Rocker Assembly.>

5) Install the A/C compressor bracket on cylinder head.
6) Install the intake manifold.
<Ref. to FU(H4SO)-15, INSTALLATION, Intake Manifold.>
7) Install the cam sprocket. <Ref. to ME(H4SO)-48, INSTALLATION, Cam Sprocket.>
8) Install the timing belt. <Ref. to ME(H4SO)-44, INSTALLATION, Timing Belt.>
9) Adjust the valve clearance. <Ref. to ME(H4SO)-30, ADJUSTMENT, Valve Clearance.>
10) Install the rocker cover and rocker cover gasket, and then connect PCV hose.

NOTE:
Use a new rocker cover gasket.

11) Install the timing belt cover.
<Ref. to ME(H4SO)-42, INSTALLATION, Timing Belt Cover.>
12) Install the crank pulley. <Ref. to ME(H4SO)-41, INSTALLATION, Crank Pulley.>
13) Install the V-belts. <Ref. to ME(H4SO)-39, INSTALLATION, V-belt.>

C: DISASSEMBLY

1) Place the cylinder head on the ST.
ST 498267800 CYLINDER HEAD TABLE
2) Set the ST on valve spring. Compress the valve spring and remove the valve spring retainer key. Remove each valve and valve spring.

NOTE:
- Keep all the removed parts in order for re-installing in their original positions.
- Mark each valve to prevent confusion.
- Pay careful attention not to damage the lips of intake valve oil seals and exhaust valve oil seals.

ST 499718000 VALVE SPRING REMOVER

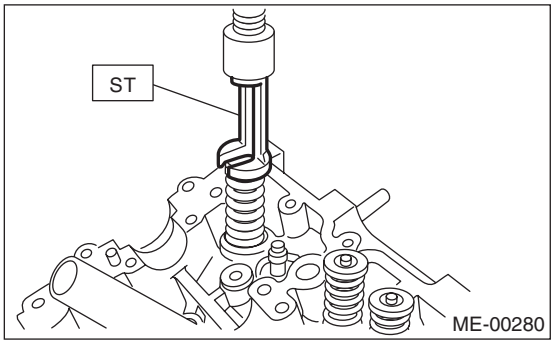

D: ASSEMBLY

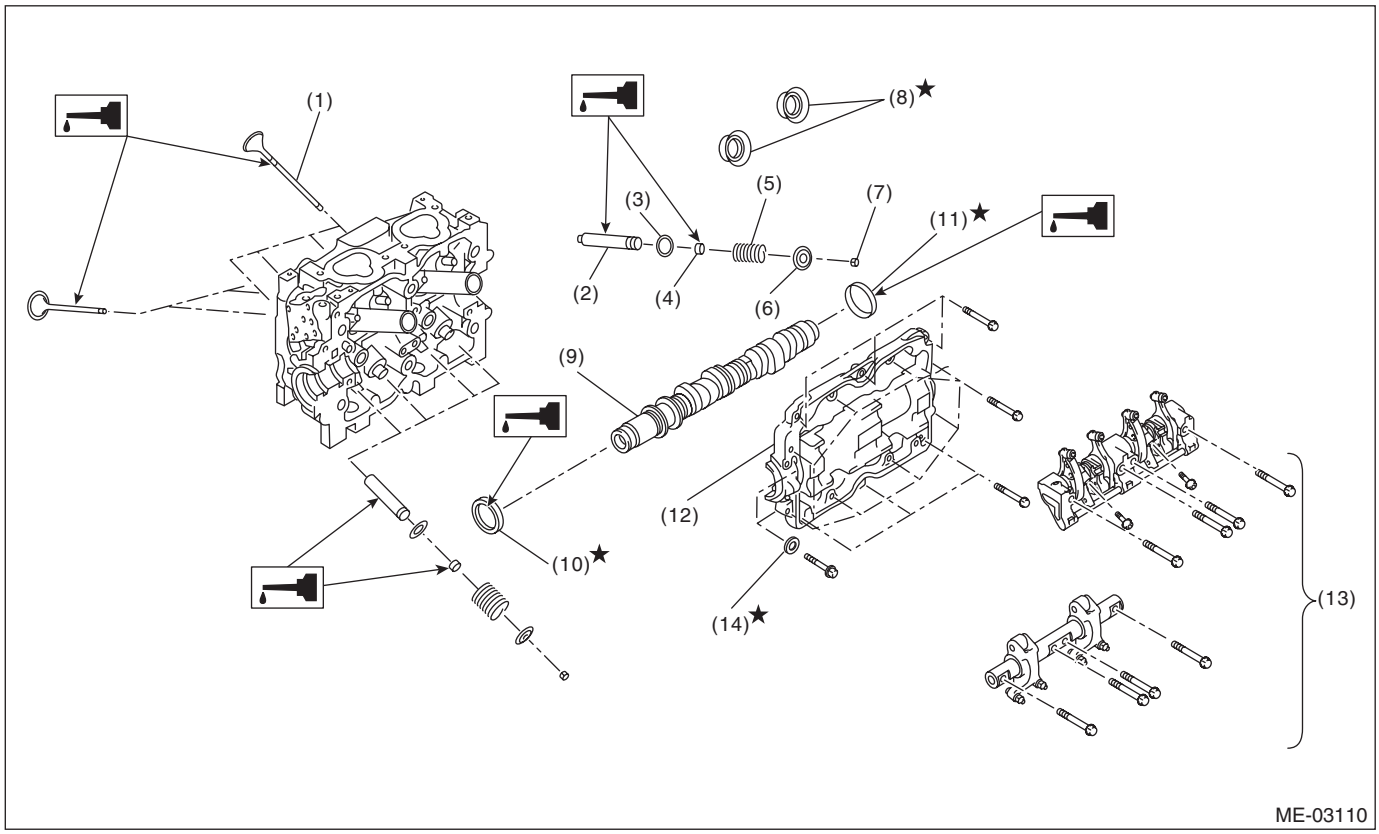

(1)	Valve	(6)	Retainer	(11)	Plug
(2)	Valve guide	(7)	Retainer key	(12)	Camshaft cap
(3)	Valve spring seat	(8)	Spark plug gasket	(13)	Valve rocker ASSY
(4)	Oil seal	(9)	Camshaft	(14)	Seal washer
(5)	Valve spring	(10)	Oil seal		

1) Installation of valve spring and valve:
(1) Place the cylinder head on the ST.
ST 498267800 CYLINDER HEAD TABLE
(2) Coat the stem of each valve with engine oil and insert the valve into the valve guide.

NOTE:
When inserting the valve into valve guide, use special care not to damage the oil seal lip.
(3) Install the valve spring and retainer.

NOTE:
Be sure to install the valve spring with its close-coiled end facing the seat on cylinder head.
(4) Set the ST on valve spring.
ST 499718000 VALVE SPRING REMOVER

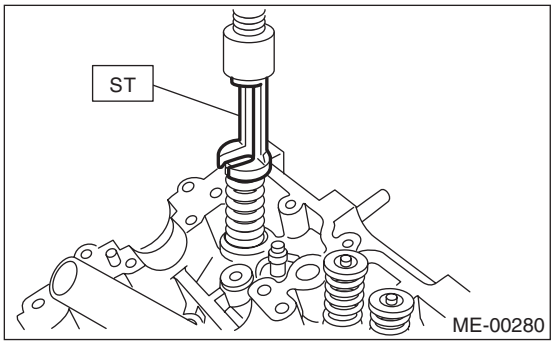

(5) Compress the valve spring and fit the valve spring retainer and valve spring retainer key.

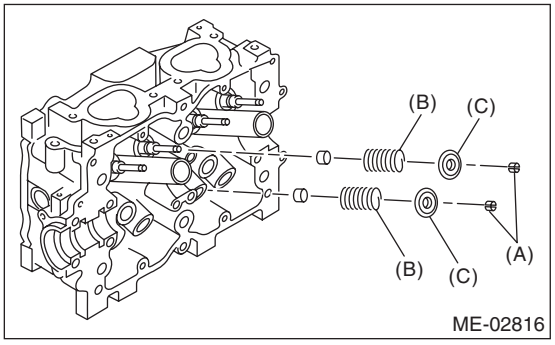

(A) Retainer key
(B) Valve spring
(C) Valve spring retainer

(6) After installing, tap the valve spring retainers lightly with a plastic hammer for better seating.

E: INSPECTION

1. CYLINDER HEAD

1) Check for cracks or damage. Use liquid penetrant tester on the important sections to check for fissures. Check that there are no marks of gas leaking or water leaking on gasket installing surface.
2) Place the cylinder head on the ST.
ST 498267800 CYLINDER HEAD TABLE
3) Measure the warping of the cylinder head surface that mates with the cylinder block using a straight edge and thickness gauge.
If the warping exceeds the limit, correct the surface by grinding it with a surface grinder.

Warping limit:
0.035 mm (0.0014 in)

Grinding limit:
0.1 mm (0.004 in)

Standard height of cylinder head:
97.5 mm (3.84 in)

NOTE:
Uneven torque for the cylinder head bolts can cause warping. When reassembling, pay special attention to the torque so as to tighten evenly.

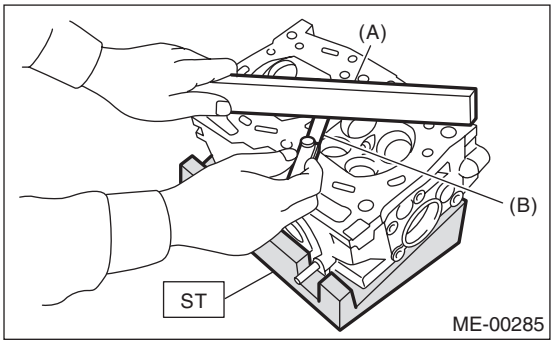

(A) Straight edge
(B) Thickness gauge

2. VALVE SEAT

Inspect the intake and exhaust valve seats, and correct the contact surfaces with a valve seat cutter if they are defective or when valve guides are replaced.

Valve seat width W:

Standard
Intake (A)
0.8 — 1.4 mm (0.03 — 0.055 in)
Exhaust (B)
1.2 — 1.8 mm (0.047 — 0.071 in)

Limit
Intake (A)
1.7 mm (0.067 in)
Exhaust (B)
2.2 mm (0.087 in)

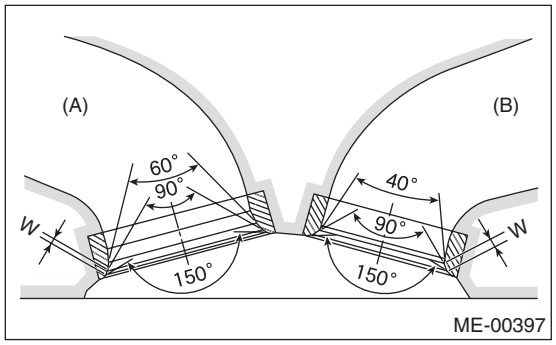

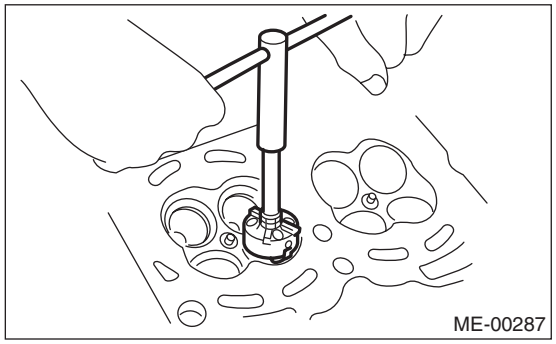

3. VALVE GUIDE

1) Check the clearance between valve guide and stem. The clearance can be checked by measuring respectively the outer diameter of valve stem with a micrometer and the inner diameter of valve guide with a caliper gauge.

Clearance between the valve guide and valve stem:

Standard
Intake
0.035 — 0.062 mm (0.0014 — 0.0024 in)
Exhaust
0.040 — 0.067 mm (0.0016 — 0.0026 in)

Limit
0.15 mm (0.059 in)

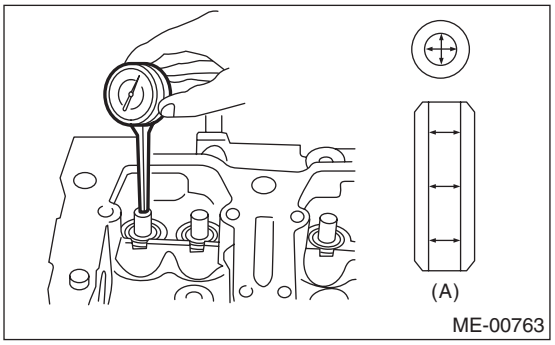

(A) Valve guide

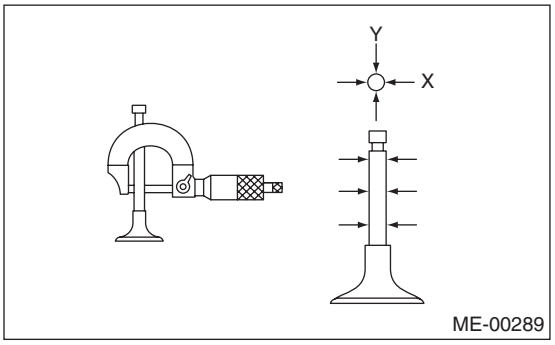

2) If the clearance between valve guide and stem is not within the limit, replace the valve guide or valve itself whichever shows greater amount of wear. See the following procedure for valve guide replacement.

Valve guide inner diameter:
6.000 — 6.012 mm (0.2362 — 0.2367 in)

Valve stem outer diameters:
Intake
5.950 — 5.965 mm (0.2343 — 0.2348 in)
Exhaust
5.945 — 5.960 mm (0.2341 — 0.2346 in)

(1) Place the cylinder head on ST1 with the combustion chamber upward so that valve guides fit the holes in ST1.
(2) Insert the ST2 into valve guide and press it down to remove the valve guide.

ST1 498267800 CYLINDER HEAD TABLE
ST2 499767200 VALVE GUIDE REMOVER

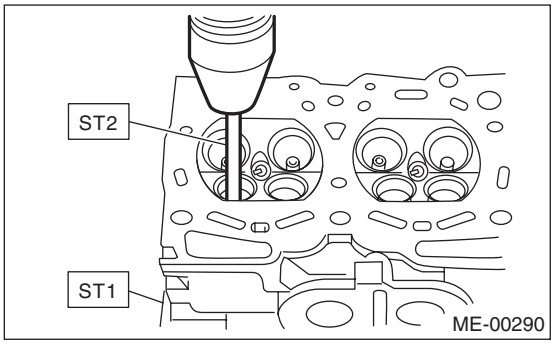

(3) Turn the cylinder head upside down and place the ST as shown in the figure.

Intake side
ST 499767700 VALVE GUIDE ADJUSTER
Exhaust side
ST 499767800 VALVE GUIDE ADJUSTER

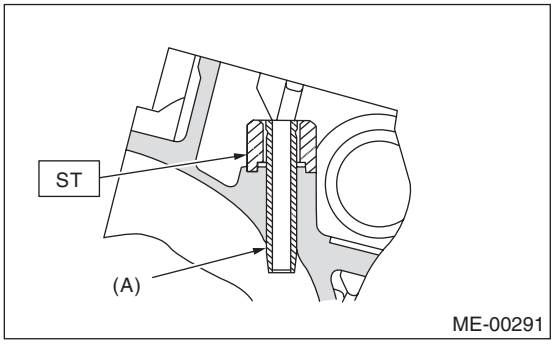

(A) Valve guide

(4) Before installing a new valve guide, make sure that neither scratches nor damages exist on the inner surface of valve guide holes in cylinder head.
(5) Put a new valve guide, coated with sufficient oil, in cylinder, and insert the ST1 into valve guide. Press in until the valve guide upper end is flush with the upper surface of ST2.

ST1 499767200 VALVE GUIDE REMOVER
Intake side
ST2 499767700 VALVE GUIDE ADJUSTER
Exhaust side
ST2 499767800 VALVE GUIDE ADJUSTER

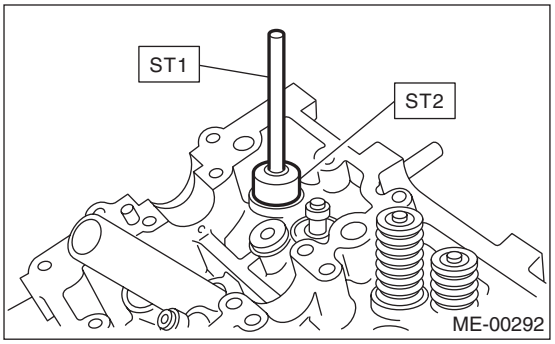

(6) Check the valve guide protrusion.

Valve guide protrusion L:
Intake
20.0 — 21.0 mm (0.787 — 0.827 in)
Exhaust
16.5 — 17.5 mm (0.650 — 0.689 in)

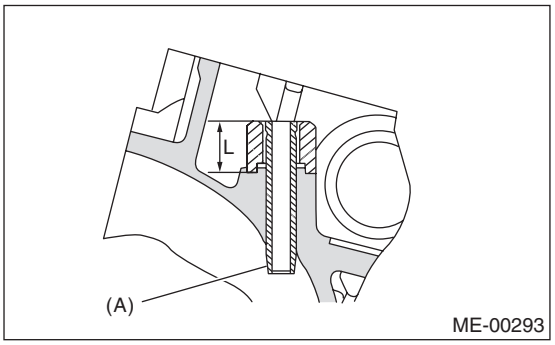

(A) Valve guide

(7) Ream the inside of valve guide using ST. Put the ST in valve guide, and rotate the ST slowly clockwise while pushing it lightly. Bring the ST back while rotating it clockwise.

NOTE:
- Apply engine oil to the ST when reaming.
- If the inner surface of valve guide is damaged, the edge of ST should be slightly ground with oil stone.
- If the inner surface of valve guide becomes lustrous and the ST does not chip, use a new ST or remedy the ST.

ST 499767400 VALVE GUIDE REAMER

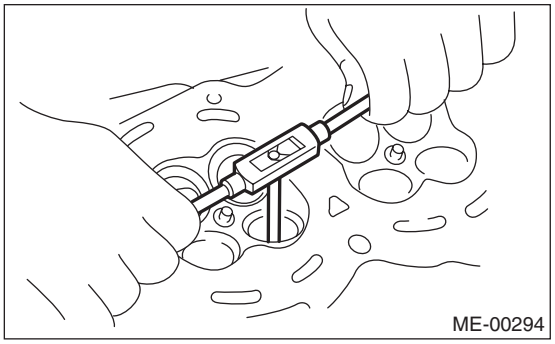

(8) After reaming, clean the valve guide to remove chips.
(9) Recheck the contact condition between valve and valve seat after replacing the valve guide.

4. INTAKE AND EXHAUST VALVE

1) Inspect the flange and stem of valve, and replace if damaged, worn, or deformed, or if “H” is outside of the limit.

H:

Intake
Standard: 0.8 — 1.2 mm (0.03 — 0.047 in)
Limit: 0.6 mm (0.024 in)

Exhaust
Standard: 1.0 — 1.4 mm (0.039 — 0.055 in)
Limit: 0.6 mm (0.024 in)

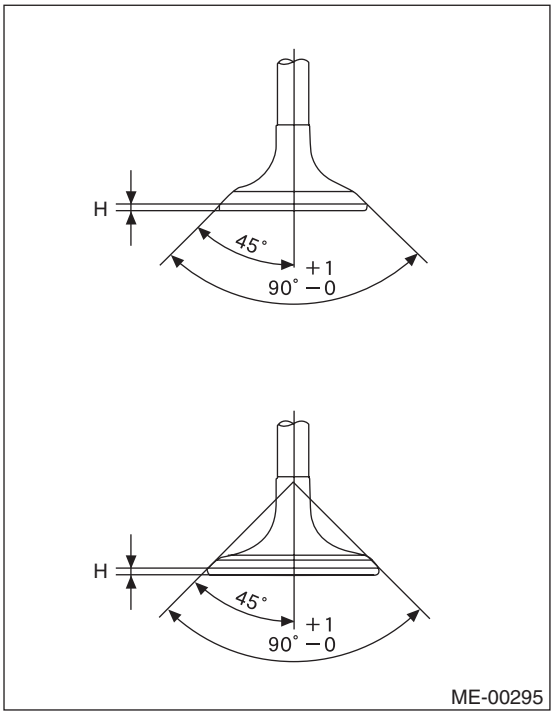

2) Apply a small amount of grinding compound on the seat surface, and lap the valve and seat surface. <Ref. to ME(H4SO)-62, VALVE SEAT, INSPECTION, Cylinder Head.> Install a new intake valve oil seal after lapping.

NOTE:
It is possible to differentiate between the intake valve and the exhaust valve by their overall length.

Valve overall length:
Intake
120.6 mm (4.75 in)
Exhaust
121.7 mm (4.79 in)

5. VALVE SPRING

1) Check the valve springs for damage, free length, and tension. Replace the valve spring if it is not within the standard value presented in the table.
2) To measure the squareness of the valve spring, stand the spring on a surface plate and measure its deflection at the top of spring using a try square.

Free length mm (in)		55.2 (2.173)
Squareness		2.5°, 2.4 mm (0.094 in) or less
Tension/spring height N (kgf, lbf)/mm (in)	Set	235.3 — 270.7 (24 — 27.6, 52.9 — 60.8)/45.0 (1.772)
	Lift	578.9 — 639.9 (59.1 — 65.3, 130.3 — 143.9)/34.7 (1.366)

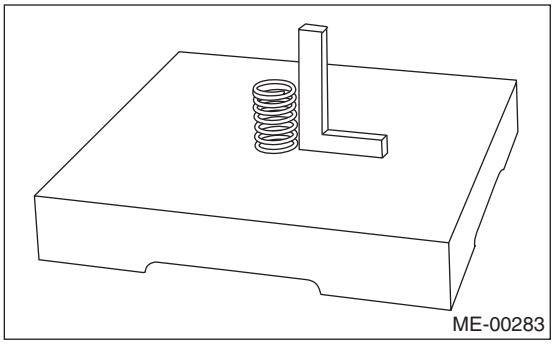

6. INTAKE AND EXHAUST VALVE OIL SEAL

For the following, remove the oil seal from the valve guide and replace it with a new part.
- When the lip is damaged.
- When the spring is out of the specified position.
- When readjusting the surfaces of valve and valve seat.
- When replacing the intake valve guide.

1) Place the cylinder head on ST1.
2) Using the ST2, press-fit the oil seal.

NOTE:
- Apply engine oil to oil seal before press-fitting.
- When press-fitting the oil seal, do not use a hammer or strike in.
- The intake valve oil seal and exhaust valve oil seal can be distinguished by colors.

Color of rubber part:
Intake [Gray]
Exhaust [Green]
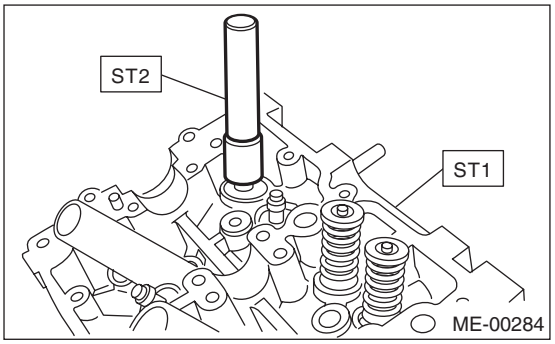
ST1 498267800 CYLINDER HEAD TABLE
ST2 498857100 VALVE OIL SEAL GUIDE